Refraction units

Easyvisus MS33 — 3 instruments

Refraction unit organised for 3 examination instruments.

The three-instrument Easyvisus MS33 is a refraction unit with a manually rotating, electrically height-adjustable table. The LCD panel and joystick control vertical table and chair movement and locking. The electric PRIMA chair, LED lighting and base with adjustable feet complete the documented standard equipment. Automatic table positioning is not advertised for this MS33.



Easyvisus MS33 · Equipment view

Sources and documentation

Request a quote | View product

Generated on 2026-11-29

> This product sheet is prepared by ASEM. It does not replace the manufacturer’s official documentation or instructions for use.

Key advantages

3-instrument station

Tabletop organised for 3 examination instruments.

Sources and documentation · Source checked on 2026-10-17

Electric positioning

Electrical adjustment of the tabletop and chair.

Sources and documentation · Source checked on 2026-10-17

Electromagnetic locking

Locking of the tabletop and refractor arm.

Sources and documentation · Source checked on 2026-10-17

Organise the Easyvisus MS33 — 3 instruments station

The manufacturer view shows the exact station configuration and access to instruments.

Sources and documentation · Source checked on 2026-08-30

Position the worktop

The documented worktop movement supports switching between instruments on Easyvisus MS33 — 3 instruments.

Sources and documentation · Source checked on 2026-08-30

Plan the installation

The official diagram documents the footprint and supports Easyvisus MS33 — 3 instruments installation planning.

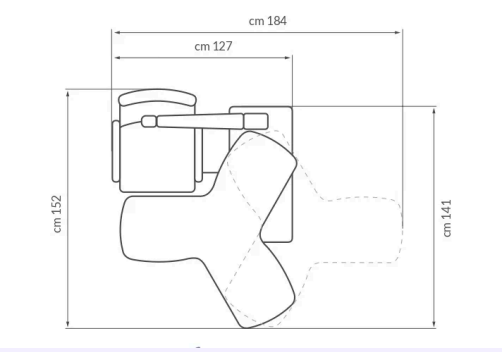

Easyvisus MS33 · Installation drawing

Sources and documentation

Sources and documentation · Source checked on 2026-08-30

Ergonomics

A layout designed around the consultation station.

Organised instruments

Equipment has its place on a dedicated unit.

Station adjustment

Available movements facilitate configuration adjustment.

Capabilities in practice

Refraction unit

Sources and documentation

Designed for a smoother workflow

A table for the selected instruments

Standard reference 400300 has a manually rotating table for three instruments and electric height adjustment. The manufacturer table does not describe an automatic positioning variant. Three instrument positions do not mean that three devices are included; instruments and their supports must be specified in the ASEM configuration.

Sources and documentation

Documented controls and positioning

The LCD panel supports a custom logo. The joystick controls chair and table up/down movement and locking. The manufacturer documents electromagnetic locking of the rotating table and table arm. Electric height adjustment is distinct from the rotation or sliding mode selected for the reference.

Sources and documentation

Designed for daily practice

Standard chair and optional accessories

The standard PRIMA has electric height adjustment and black skai upholstery without a footrest. A tip-up footrest, other coverings and replacement with another chair model are documented options. Chair versions must be confirmed in the ASEM quotation. Original photographs may show a footrest, phoropter arm or other optional accessories; visibility does not establish inclusion. Illustrated instruments and accessories must be identified separately.

Sources and documentation

Lighting and instrument power supply

The aluminium pole has dimmable ambient LED lighting, an LED reading light and a chart projector support plate. The main unit includes power supply for the slit-lamp transformer. The painted steel base has adjustable feet. Additional instrument power supplies are listed as accessories and are not assumed to be included automatically. No complete-unit input voltage or frequency is extrapolated.

Sources and documentation



Easyvisus MS33 · Equipment view

Sources and documentation



Easyvisus MS33 · Equipment view

Sources and documentation

Installation and configuration choice

Left-handed version 400300S is optional. The dimensioned drawing concerns reference 400300 and identifies pole height; that dimension is not used as overall unit height or table travel. The pages do not give weight, supply frequency or a numerical height interval. Practice layout, accessories and instruments must be confirmed with ASEM.

Sources and documentation

Technical specifications & documentation

Brand
F.I.S.O.

Model
Easyvisus MS33 — 3 instruments

Technology
Refraction unit

Clinical use
Specialised technologies

Instrument capacity
3

Sources and documentation

Chair height
Electric adjustment; Prima chair as standard

Optional footrest and other chairs are not assumed installed.

Sources and documentation

Table height
Electric adjustment

Sources and documentation

Table locking
Table and arm: electromagnetic locking

Sources and documentation

Table movement
Manual rotation; automatic positioning depending on model

Manufacturer configuration choice; no automatic option is assumed installed.

Sources and documentation

Workstation lighting

Ambient LED lighting · LED reading light

Sources and documentation

Controls

LCD panel; joystick for adjustment and locking

Sources and documentation

Base

Painted steel; adjustable feet

Sources and documentation

Optional footrest and other chairs are not assumed installed.

Manufacturer configuration choice; no automatic option is assumed installed.

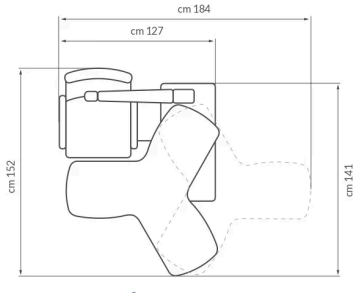

Easyvisus MS33 · Installation drawing

Sources and documentation

Downloads & resources

Manufacturer documentation

PDF · 15,672 kB

Sources and documentation

- https://www.fiso.info/en/products/refraction_units/easyvisus-ms33-unit-3-instruments_450/
  Source checked on 2026-10-05
- https://www.fiso.info/en/products/refraction_units/easyvisus-ms33-unit-3-instruments_450/
  Source checked on 2026-10-06
- https://www.fiso.info/dynatc/brochure-0497-2d40/frastema_cat-fiso_16luglio_2025_med.pdf
  Source checked on 2026-10-06
- https://www.fiso.info/en/products/refraction_units/easyvisus-ms33-unit-3-instruments_450/
  Source checked on 2026-10-17

- https://www.fiso.info/en/products/refraction_units/easyvisus-ms33-unit-3-instruments_450/
  Source checked on 2026-08-30
- https://www.fiso.info/dynatc/brochure-0497-2d40/frastema_cat-fiso_16luglio_2025_med.pdf
  Source checked on 2026-10-18

Your questions about Easyvisus MS33 — 3 instruments

What is the documented Instrument capacity of Easyvisus MS33 — 3 instruments?

3

Sources and documentation

What is the documented Chair height of Easyvisus MS33 — 3 instruments?

Electric adjustment; Prima chair as standard — Optional footrest and other chairs are not assumed installed.

Sources and documentation

Which configuration should I confirm for Easyvisus MS33 — 3 instruments?

Optional footrest and other chairs are not assumed installed.

Sources and documentation

Where can I find the documentation for Easyvisus MS33 — 3 instruments?

Manufacturer documentation (PDF) — https://asem-medical.com/storage/catalogue-enrichment/fiso-20261006/fiso-original-2025.pdf

Sources and documentation

Does the three-instrument MS33 have automatic rotation?

The documented 400300 configuration has manual rotation and electric height adjustment. Automatic positioning from RM64 models must not be attributed to it.

Sources and documentation

Is there a left-handed version?

The brochure identifies optional left-handed 400300S. Chair selection and handedness should be specified in the proposal.

Sources and documentation

Which chair is described in the standard configuration?

The PRIMA chair is described with electric height adjustment, black upholstery and no footrest. A footrest and other chair models are accessories or variants.

Sources and documentation

Related products



Panvisus Rondo

F.I.S.O.

Refraction units

Panvisus Rondo unit for two instruments, depending on configuration.

View product



Easyvisus Curve

F.I.S.O.

Refraction units

Refraction unit organised for 2 examination instruments.

View product



Easyvisus MS33 — 2 instruments

F.I.S.O.

Refraction units

Refraction unit organised for 2 examination instruments.

View product



Easyvisus One

F.I.S.O.

Refraction units

Refraction unit organised for 1 examination instrument.

View product

Explore the ASEM clinical catalogue

Browse related areas of the ASEM catalogue. These links do not extend the indications of this device.

Specialised technologies

More than a device, a long-term partnership

Discuss your project with ASEM: equipment selection, installation, training and technical support.



Service illustration

Installation

Discuss the installation requirements and configuration with our technical team.

Learn more



Service illustration

Training

Ask about the training and familiarisation available for your equipment.

Learn more

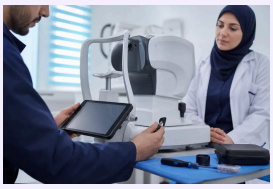

Service illustration

After-sales service

Contact ASEM for technical assistance and the support appropriate to your equipment.

Learn more



Service illustration

Expert advice

Tell us about your clinical needs to discuss a suitable equipment selection.

Learn more

Contact a specialist | Explore all products | Manufacturer website

+21320092281 · direction@asem-medical.com

Document version: 358fbd5bec35