Refraction units

Easyvisus One

Refraction unit organised for 1 examination instrument.

Easyvisus One is a F.I.S.O. refraction unit with a fixed-height table for one instrument. Its table arm locks mechanically in all positions. The standard PRIMA chair has electric height adjustment but no rotation or footrest. The manufacturer states a 100 cm width for reference 400100; instruments and accessories shown in photographs must be checked against the ASEM configuration.



Easyvisus One · Equipment view

Sources and documentation

Request a quote | View product

Generated on 2026-11-29

> This product sheet is prepared by ASEM. It does not replace the manufacturer’s official documentation or instructions for use.

Key advantages

1-instrument station

Tabletop organised for 1 examination instrument.

Sources and documentation · Source checked on 2026-10-17

Fixed-height tabletop

Arm with mechanical locking in all positions.

Sources and documentation · Source checked on 2026-10-17

Electrically adjustable chair

PRIMA chair with electrical height adjustment.

Sources and documentation · Source checked on 2026-10-17

Organise the Easyvisus One station

The manufacturer view shows the exact station configuration and access to instruments.

Sources and documentation · Source checked on 2026-08-30

Position the worktop

The documented worktop movement supports switching between instruments on Easyvisus One.

Sources and documentation · Source checked on 2026-08-30

Plan the installation

The official diagram documents the footprint and supports Easyvisus One installation planning.

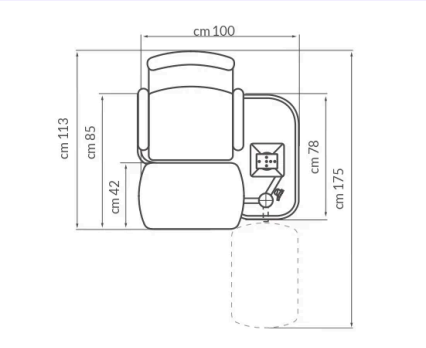

Easyvisus One · Installation drawing

Sources and documentation

Sources and documentation · Source checked on 2026-08-30

Ergonomics

A layout designed around the consultation station.

Organised instruments

Equipment has its place on a dedicated unit.

Station adjustment

Available movements facilitate configuration adjustment.

Capabilities in practice

Refraction unit

Sources and documentation

Designed for a smoother workflow

A table for the selected instruments

Standard reference 400100 has a fixed-height table for one instrument. The tabletop is not advertised as electrically height-adjustable. One instrument position does not mean that the instrument is supplied with the unit. Left-handed 400100S is an optional version and must be specified separately.

Sources and documentation

Documented controls and positioning

Table-arm locking is mechanical in all positions, not electromagnetic. The standard chair has electric height adjustment without rotation. 360-degree rotation and a footrest belong to optional PRIMA versions and are not attributed to the standard chair. A foot control for chair up/down movement is also listed among the accessories.

Sources and documentation

Designed for daily practice

Standard chair and optional accessories

The standard PRIMA has electric height adjustment and black skai upholstery, without rotation or footrest. Rotation, a tip-up footrest and replacement with another chair model are options, not features of the standard configuration. Original photographs may show a footrest, phoropter arm or other optional accessories; visibility does not establish inclusion. Illustrated instruments and accessories must be identified separately.

Sources and documentation

Lighting and instrument power supply

The brochure documents a 230 V supply for the instrument; this does not specify input voltage or consumption of the complete unit. The aluminium pole has an LED reading light and a chart projector support plate. Ambient LED lighting or an LCD control panel is not added by analogy with other Easyvisus models. Practice connection requirements must be checked with ASEM.

Sources and documentation



Easyvisus One · Equipment view

Sources and documentation



Easyvisus One · Equipment view

Sources and documentation

Installation and configuration choice

A 100 cm width is explicitly stated for unit 400100. Other drawing measurements describe its layout and positions and are not converted into total height, a single depth or an adjustment range. Weight and supply frequency are not given here. Clearances, right- or left-handed layout and accessories must be confirmed for the actual installation.

Sources and documentation

Technical specifications & documentation

Brand
F.I.S.O.

Model
Easyvisus One

Technology
Refraction unit

Clinical use
Specialised technologies

Instrument capacity
1

Sources and documentation

Chair height
Electric adjustment; Prima chair as standard

Optional footrest and other chairs are not assumed installed.

Sources and documentation

Table height
Fixed height

Sources and documentation

Table locking
Refractor arm: mechanical locking

Sources and documentation

Workstation lighting
LED reading light

Sources and documentation

Optional footrest and other chairs are not assumed installed.

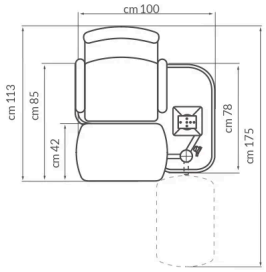

Easyvisus One · Installation drawing

Sources and documentation

Downloads & resources

Manufacturer documentation

PDF · 15,672 kB

Sources and documentation

- https://www.fiso.info/en/products/refraction_units/easyvisus-one_453/
  Source checked on 2026-10-05
- https://www.fiso.info/en/products/refraction_units/easyvisus-one_453/
  Source checked on 2026-10-06
- https://www.fiso.info/dynatc/brochure-0497-2d40/frastema_cat-fiso_16luglio_2025_med.pdf
  Source checked on 2026-10-06
- https://www.fiso.info/en/products/refraction_units/easyvisus-one_453/
  Source checked on 2026-10-17
- https://www.fiso.info/en/products/refraction_units/easyvisus-one_453/
  Source checked on 2026-08-30
- https://www.fiso.info/dynatc/brochure-0497-2d40/frastema_cat-fiso_16luglio_2025_med.pdf
  Source checked on 2026-10-18

Your questions about Easyvisus One

What is the documented Instrument capacity of Easyvisus One?

1

Sources and documentation

What is the documented Chair height of Easyvisus One?

Electric adjustment; Prima chair as standard — Optional footrest and other chairs are not assumed installed.

Sources and documentation

Which configuration should I confirm for Easyvisus One?

Optional footrest and other chairs are not assumed installed.

Sources and documentation

Where can I find the documentation for Easyvisus One?

Manufacturer documentation (PDF) — https://asem-medical.com/storage/catalogue-enrichment/fiso-20261006/fiso-original-2025.pdf

Sources and documentation

How many instruments does the table accommodate?

Easyvisus One 400100 is documented for one instrument, with a fixed-height table and mechanical table-arm locking. It is not a two-position unit.

Sources and documentation

Does the standard PRIMA chair rotate?

The standard configuration describes a non-rotating PRIMA chair without a footrest, with electric height adjustment. A 360° PRIMA rotation is listed as an option.

Sources and documentation

Which instrument power supply is specified?

The brochure specifies a 230 V supply for the instrument. This is neither a power-consumption rating nor confirmation of compatibility with every device.

Sources and documentation

Related products



Panvisus Rondo

F.I.S.O.

Refraction units

Panvisus Rondo unit for two instruments, depending on configuration.

View product



Easyvisus Curve

F.I.S.O.

Refraction units

Refraction unit organised for 2 examination instruments.

View product



Easyvisus MS33 — 2 instruments

F.I.S.O.

Refraction units

Refraction unit organised for 2 examination instruments.

View product



Easyvisus MS33 — 3 instruments

F.I.S.O.

Refraction units

Refraction unit organised for 3 examination instruments.

View product

Explore the ASEM clinical catalogue

Browse related areas of the ASEM catalogue. These links do not extend the indications of this device.

Specialised technologies

More than a device, a long-term partnership

Discuss your project with ASEM: equipment selection, installation, training and technical support.



Service illustration

Installation

Discuss the installation requirements and configuration with our technical team.

Learn more



Service illustration

Training

Ask about the training and familiarisation available for your equipment.

Learn more

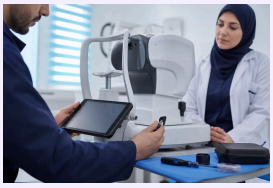

Service illustration

After-sales service

Contact ASEM for technical assistance and the support appropriate to your equipment.

Learn more



Service illustration

Expert advice

Tell us about your clinical needs to discuss a suitable equipment selection.

Learn more

Contact a specialist | Explore all products | Manufacturer website

+21320092281 · direction@asem-medical.com

Document version: 28f2a6278f54