Izegrar n usuneɣ d uwali

EIBOS 2

Aferdis n tmugli wessiɛen i umikruskuḍ n ugzay yemṣadan.

EIBOS 2 d anagraw Haag-Streit n twali n fundus s teɣmert wessiɛen, i umikrusku n ugzay iwulmen. Asefrek n tmuɣli d umuttay aḍwan dduklen deg umallal; mačči d taftilt n tfexsiḍt neɣ amikrusku iman-is. Afran n tlentiyin, inadiyen n tmuɣli d twila aseṛtil ilaq ad iwulem i ugzay d yibenkan i d-tettak ASEM s tidet. Tilentiyin i yettuseqdacen aṭas neɣ yiwet n tikelt ur ḍemnent ara asenqes s umḍan n yimih n lɛedwa neɣ n yisumak.



EIBOS 2 · Tugna

Iɣbula d yisemliyen

Suter tasɣunt n ssuma

Wali afaris

Tettwahegga ass n 2026-11-28

> Taferkit-a n ufaris thegga-tt ASEM. Ur tettbeddil ara isemliyen unsiben n umeskar neɣ tinaḍin n useqdec.

Iferdisen igejdan

Tamugli wessiɛen war anermis

Tamugli wessiɛen n retina s umikruskuḍ n ugzay.

Amikruskuḍ yemṣadan ilaq

Iɣbula d yisemliyen · Aɣbalu yettwasentem ass n 2026-10-17

Amuttay n tugna deg yiwen

Alemmes d umuttay n tugna deg yiwen n unagraw.

Iɣbula d yisemliyen · Aɣbalu yettwasentem ass n 2026-10-17

Alemmes s ufus

Iɣallen n tama i useggem n ulemmes s ufus.

Iɣbula d yisemliyen · Aɣbalu yettwasentem ass n 2026-10-17

Tiwuriwin deg usnas

Wali agwens n tiṭ war anermis

EIBOS2 d anagraw s twali tehrawan i ugzay n retina, s useggem n tifrat n tugna d win yettiɣalen tugna i yeddan deg-s. Yettwaseqdac akked umikruskuḍ n ugzay imṣada.

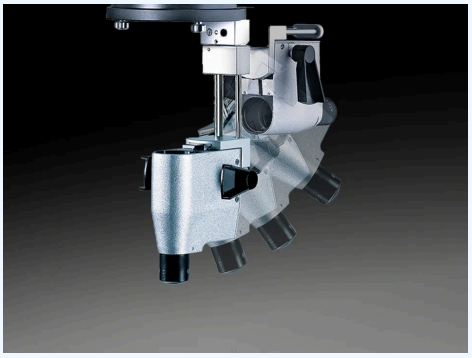

Tugna tatiknikant — EIBOS 2

Iɣbula d yisemliyen

Iɣbula d yisemliyen

Fren gar lentes n twali

Ameskar yessegza lente 90D i yimahilen n makula d SPXL132D i twali tehrawan n 124°. Lentes-a ur d-skanent ara yiwet n twila i d-yettunefken.

Lentes d twila ilaq ad ttwasentment.

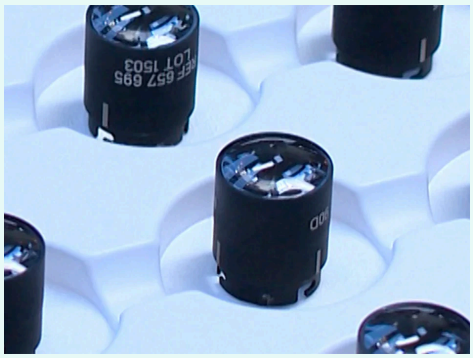

Tugna tatiknikant — EIBOS 2

Iɣbula d yisemliyen

Iɣbula d yisemliyen

I wakken ad yishil ubrid n umahil

Telqay ɣer yixef n yiḍudan

Amekanizm n usefrek n tmuɣli d umuttay dduklen deg unagraw n twali. Ifassen n usefrek zemren ad ttwasebdedden deg sin n yidisan n umuttay; ttağğan aseggem n tmuɣli seg fundus ɣer vitri n ufella. Tiḥnatin timdewwrin i unadi n umɛiwen. Aseggem n umudul yemgarad ɣef usefrek n tmuɣli n umikrusku; tawila n yinadiyen ilaq ad tettwafren ilmend n useqdec.

Iɣbula d yisemliyen

Amuttay yedduklen d users n umahil

Amuttay aḍwan yedduklen yettağğa tamuɣli n fundus s tanila iwulmen. Anagraw yezmer ad yettwaknu ɣer umkan n umahil neɣ yettwakkes ma ur yettwaseqdec ara, ilmend n usbeddi ɣef umikrusku iwulmen. S usimɣer adday, ameskar yeskan tamuɣli n fundus d umkan n tgeẓmi deg yiwen n wakud. Tawuri-a teqqen ɣer twila taḍwant, talentit d tegnatin n ukayad.

Iɣbula d yisemliyen

Uɣal seg ugwens n tiṭ ɣer lqerniya

Anagraw yettuzuzer ɣer wadig n umahil neɣ yettwazeggel mi ur yettwasra ara. Mi yettwarfed, amikruskuḍ yettuɣal ɣer useggem n tifrat ɣef lqerniya i d-yesbadu umeskar.

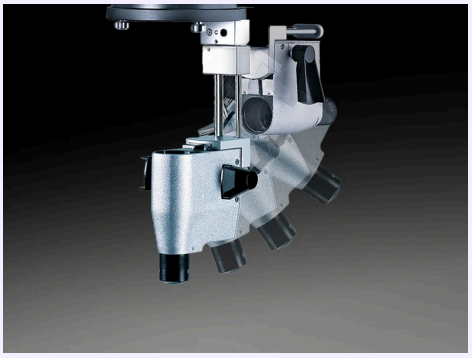

Tugna tatiknikant — EIBOS 2

Iɣbula d yisemliyen

Iɣbula d yisemliyen

Seggem tifrat n tugna s uḍaḍ

Iɣallen n usenqed zemren ad ttwasbedden ɣef yal tama n win yettiɣalen tugna. Inadiyen imdewwren d afran-nniḍen i yessegza umeskar mi d amɛiwen i yesseggamen tifrat n tugna.

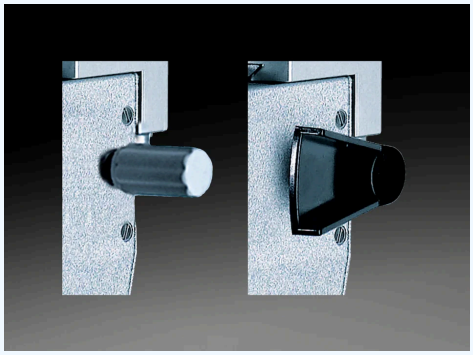

Tugna tatiknikant — EIBOS 2

Iɣbula d yisemliyen

Iɣbula d yisemliyen

I useqdec n yal ass

Heggi azrar n twali

Asebter n umeskar yefrez lentes i izemren ad ttwasizdgent akked lentes E.DL n yiwen n useqdec. Afran d uheggi-nsent ilaq ad ḍefren tinadin n lente d umikruskuḍ icudden.

Iɣbula d yisemliyen

Tilentiyin: semgarad gar twiliwin

Talentit n makula: 90 D. Talentit SPXL s teɣmert wessiɛen: 132 D. Teɣmert iɣef yella yisemli s SPXL: 124°. Azalen-a qqnen ɣer tlentiyin yemgaraden, mačči d yiwet n tnezmart i yettuseggamen. Ameskar ibder tilentiyin i yettuseqdacen aṭas, i yettwaseṛtilen, d tirmal n yiwet n tikelt. Afran, tilentiyin i d-yettunefken d yilugan n useɣti ilaq ad ttwasegzin ilmend n unaḍ n useqdec d tesɣunt ASEM; mačči akk tilentiyin i d-yettunefken s wudem awurman.

Iɣbula d yisemliyen

Seggem amallal akked umikrusku amseqdac

Asebter unsib yeskan EIBOS 2 i Hi-R NEO 900, tabrušurt METIS tamirant teskan-it d afran n twali n fundus. Iɣbula-a ur sebganen ara tuqqna akked akk imikruskuwen. Amikrusku amseqdac, asbeddi, tilentiyin d taduli aseṛtil ilaq ad ttwaseɣten akked ASEM. Taẓayt neɣ isefka n trisiti n umikrusku meṛṛa ur ttunefken ara i umallal-a.

Iɣbula d yisemliyen

Senqed amikruskuḍ n usbeddi

EIBOS2 yettwaskan akked Hi-RNEO900 daɣen deg tewriqt METIS. Asbeddi s timmad-is d yimerna ilaq ad ttwasentmen i umikruskuḍ yellan s tidet deg umkan.

D amerna; ulac tulmist n umikruskuḍ n usbeddi ara nettak i EIBOS2.

Iɣbula d yisemliyen

Isallen itiknikanen d yisemliyen

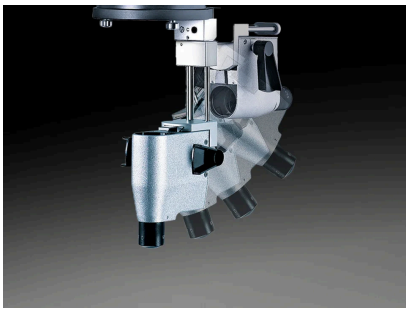

Tugna tatiknikant — EIBOS 2

Iɣbula d yisemliyen

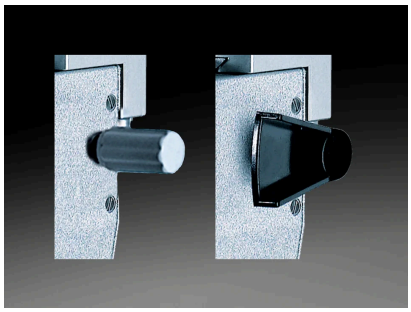

Tugna tatiknikant — EIBOS 2

Iɣbula d yisemliyen

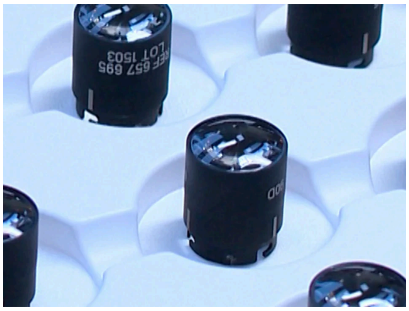

Tugna tatiknikant — EIBOS 2

Iɣbula d yisemliyen

Asider d yiɣbula

Isemliyen n umeskar

PDF · 4,669 kB

Iɣbula d yisemliyen

- https://haag-streit.com/en/products/categories/surgical/microscopes/hi-r-neo-900-microscope/eibos2
  Aɣbalu yettwasentem ass n 2026-10-06
- https://us.haag-streit.com/2%20Products/Surgical/Surgical%20microscopes/METIS/brochures/HS_metis_br_7221092_brochure_en.pdf
  Aɣbalu yettwasentem ass n 2026-10-06
- https://haag-streit.com/en/products/categories/surgical/microscopes/hi-r-neo-900-microscope/eibos2
  Aɣbalu yettwasentem ass n 2026-10-17

- https://haag-streit.com/en/products/categories/surgical/microscopes/hi-r-neo-900-microscope/eibos2
  Aɣbalu yettwasentem ass n 2026-10-18
- https://haag-streit.com/en/products/categories/surgical/microscopes/hi-r-neo-900-microscope/eibos2
  Aɣbalu yettwasentem ass n 2026-10-18
- https://haag-streit.com/en/products/categories/surgical/microscopes/hi-r-neo-900-microscope/eibos2
  Aɣbalu yettwasentem ass n 2026-10-18
- https://haag-streit.com/en/products/categories/surgical/microscopes/hi-r-neo-900-microscope/eibos2
  Aɣbalu yettwasentem ass n 2026-10-18
- https://haag-streit.com/en/products/categories/surgical/microscopes/hi-r-neo-900-microscope/eibos2
  Aɣbalu yettwasentem ass n 2026-10-18
- https://haag-streit.com/en/products/categories/surgical/microscopes/hi-r-neo-900-microscope/eibos2
  Aɣbalu yettwasentem ass n 2026-10-18
- https://us.haag-streit.com/2%20Products/Surgical/Surgical%20microscopes/METIS/brochures/HS_metis_br_7221092_brochure_en.pdf
  Aɣbalu yettwasentem ass n 2026-10-18
- https://haag-streit.com/en/products/categories/surgical/microscopes/hi-r-neo-900-microscope/eibos2
  Aɣbalu yettwasentem ass n 2026-10-18

Isteqsiyen-nwen ɣef EIBOS 2

Anda ara afeɣ isemliyen n EIBOS 2?

Isemliyen n umeskar (PDF) — https://asem-medical.com/storage/catalogue-enrichment/haag-streit-20261006/metis-original.pdf

Iɣbula d yisemliyen

EIBOS2 d amikrusku n tkerḍa ummid?

Ala. EIBOS2 yettwaskan d azegrir n twali n ukessar n tiṭ s usemsawi d useqlab udmisen.

Iɣbula d yisemliyen

Amek yezmer azegrir EIBOS2 ad yettwaɛzel?

Ameskar yeglem azegrir i yettadren i useqdec, yerna yettali mi ur yettili ara ilaq.

Iɣbula d yisemliyen

Amek ttwasqedcen yinadiyen n usemsawi n EIBOS2?

Asebtar yeglem timsegdal i yezmer ad ttwabeddent ɣef sin n yidisan, neɣ tiqeffalin timdewwrin i umallal.

Iɣbula d yisemliyen

Anta tlintin n twali i d-yettwasumren i EIBOS2?

Asebtar yesskan-d talint n tmakula n 90 D akked tlint SPXL n 132 D s teɣmert n twali n 124°. D sin n yifran yemgaraden.

Iɣbula d yisemliyen

Yella ufran-nniḍen ɣef lentes i yettwasizdigen?

Asebter n umeskar yeskan daɣen lentes E.DL n yiwen n useqdec; tamsisɣelt s timmad-is d usiweḍ ilaq ad ttwasentmen.

Iɣbula d yisemliyen

Ugar n yibenk, d amɛiwen i wakud ɣezzifen

Mmeslay ɣef usenfar-ik akked ASEM: afran n yibenkan, asbeddi, asileɣ d tallalt tatiknikant.



Tugna n umeẓlu

Asbeddi

Mmeslay ɣef yisuturen n usbeddi d twila akked terbaɛt-nneɣ tatiknikant.

Issin ugar



Tugna n umeẓlu

Asileɣ

Suter isallen ɣef usileɣ d ulmad n useqdec yellan i yibenk-ik.

Issin ugar



Tugna n umeẓlu

Ameẓlu deffir uznuzu

Nermes ASEM i tallalt tatiknikant d umɛiwen i yibenk-ik.

Issin ugar



Tugna n umeẓlu

Anṣaḥ n yimussnawen

Mmeslay-aɣ ɣef yisuturen-ik iklinikiyen i wakken ad nefren ibenkan iwulmen.

Issin ugar

Nermes amussnaw | Wali akk ifarisen | Asmel n umeskar

+21320092281 · direction@asem-medical.com

Lqem n yisemli: b606e5fb9f19